Strong cosmic censorship with a cosmological constant I

José Natário

(Instituto Superior Técnico, Lisbon)

Braga, December 2013

Outline

- Einstein-Maxwell-scalar field equations in spherical symmetry
- Reissner-Nordström-(anti-)de Sitter solution
- Strong cosmic censorship
- Mass inflation: heuristics
- Mass inflation: rigorous results

Einstein-Maxwell-scalar field equations in spherical symmetry

- The equations for a gravitating massless scalar field in a sourceless electromagnetic field with a cosmological constant are

$$R_{\mu\nu} - \frac{1}{2} R g_{\mu\nu} + \Lambda g_{\mu\nu} = 2T_{\mu\nu}$$

$$T_{\mu\nu} = \partial_\mu \phi \, \partial_\nu \phi - \frac{1}{2} \partial_\alpha \phi \, \partial^\alpha \phi \, g_{\mu\nu} + F_{\mu\alpha} F_\nu{}^\alpha - \frac{1}{4} F_{\alpha\beta} F^{\alpha\beta} g_{\mu\nu}$$

$$\Box \phi = 0$$

$$dF = d^* F = 0$$

(using units for which $c = 4\pi G = \varepsilon_0 = 1$)

- If we assume spherical symmetry then the metric and the fields become

$$
\begin{aligned}
ds^2 &= -\Omega^2(u,v)du\,dv + r^2(u,v)\left(d\theta^2 + \sin^2\theta\, d\varphi^2\right) \\
\phi &= \phi(u,v) \\
F &= -E(u,v)\frac{\Omega^2(u,v)}{2}du \wedge dv
\end{aligned}
$$

- In particular the electromagnetic field completely decouples:

$$
{}^\star F = E(u,v)r^2(u,v)\sin\theta\, d\theta \wedge d\varphi \;\Rightarrow\; E(u,v) = \frac{e}{r^2(u,v)}
$$

- The total charge $4\pi e$ is topological:

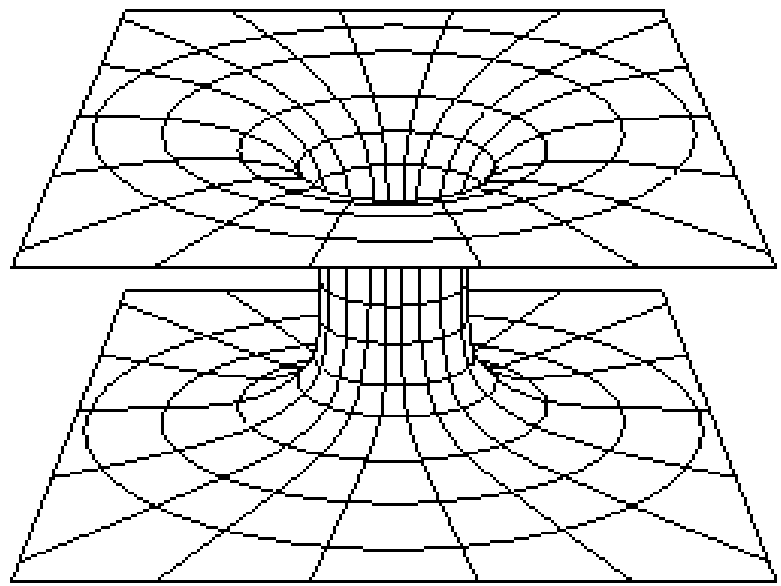

- Introducing the renormalized Hawking mass ϖ through

$$1-\frac{2\varpi}{r}+\frac{e^2}{r^2}-\frac{\Lambda}{3}r^2=-\frac{4\partial_u r\partial_v r}{\Omega^2}$$

the Einstein-Maxwell-scalar field equations become

$$\partial_u\partial_v\phi=-\frac{\partial_u r\,\partial_v\phi}{r}-\frac{\partial_v r\,\partial_u\phi}{r}$$

$$\partial_u\partial_v r=\partial_u r\,\partial_v r\,\frac{\frac{2\varpi}{r^2}-\frac{2e^2}{r^3}-\frac{2\Lambda}{3}r}{1-\frac{2\varpi}{r}+\frac{e^2}{r^2}-\frac{\Lambda}{3}r^2}$$

$$\partial_u\varpi=\left(1-\frac{2\varpi}{r}+\frac{e^2}{r^2}-\frac{\Lambda}{3}r^2\right)\frac{(r\partial_u\phi)^2}{2\partial_u r}$$

$$\partial_v\varpi=\left(1-\frac{2\varpi}{r}+\frac{e^2}{r^2}-\frac{\Lambda}{3}r^2\right)\frac{(r\partial_v\phi)^2}{2\partial_v r}$$

- Characteristic initial data:

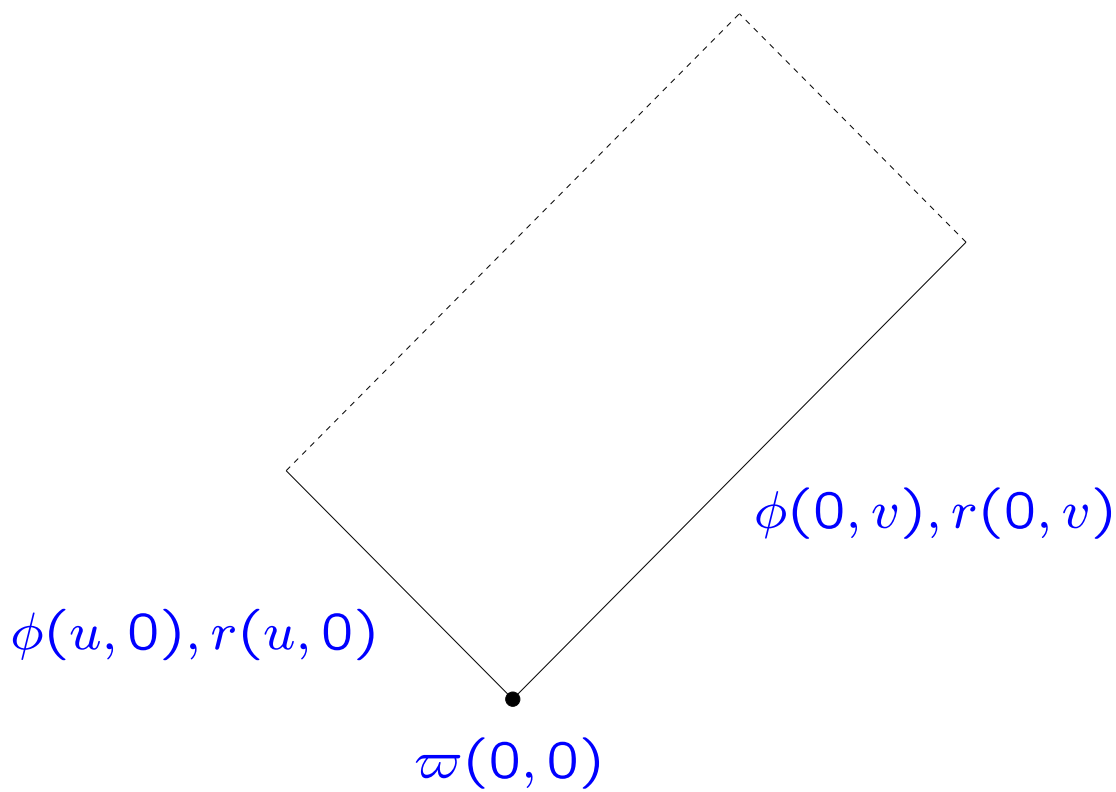

Reissner-Nordström-(anti-)de Sitter solution

- Vacuum: $\phi = 0 \Rightarrow \varpi = \varpi_0$.

- The metric is written

$$ds^2 = \frac{4\partial_u r \partial_v r}{1 - \frac{2\varpi_0}{r} + \frac{e^2}{r^2} - \frac{\Lambda}{3} r^2} du\, dv + r^2 \left(d\theta^2 + \sin^2\theta\, d\varphi^2 \right)$$

  with m and e constant.

- Zeros $r = r_-$ (Cauchy horizon), $r = r_+$ (event horizon) and $r = r_c$ (cosmological horizon) (for $\Lambda > 0$ only) must be null: $\partial_u r = 0$ or $\partial_v r = 0$.

- $r = 0$ is a singularity, where the equations break down (and the curvature explodes).

- $r = r_+$ is the event horizon. It is the boundary of the black hole region, which contains the singularity and is not visible from the outer region.

- $r = r_-$ is the Cauchy horizon. Observers crossing this horizon can see the singularity. However, the blueshift effect should make this horizon unstable.

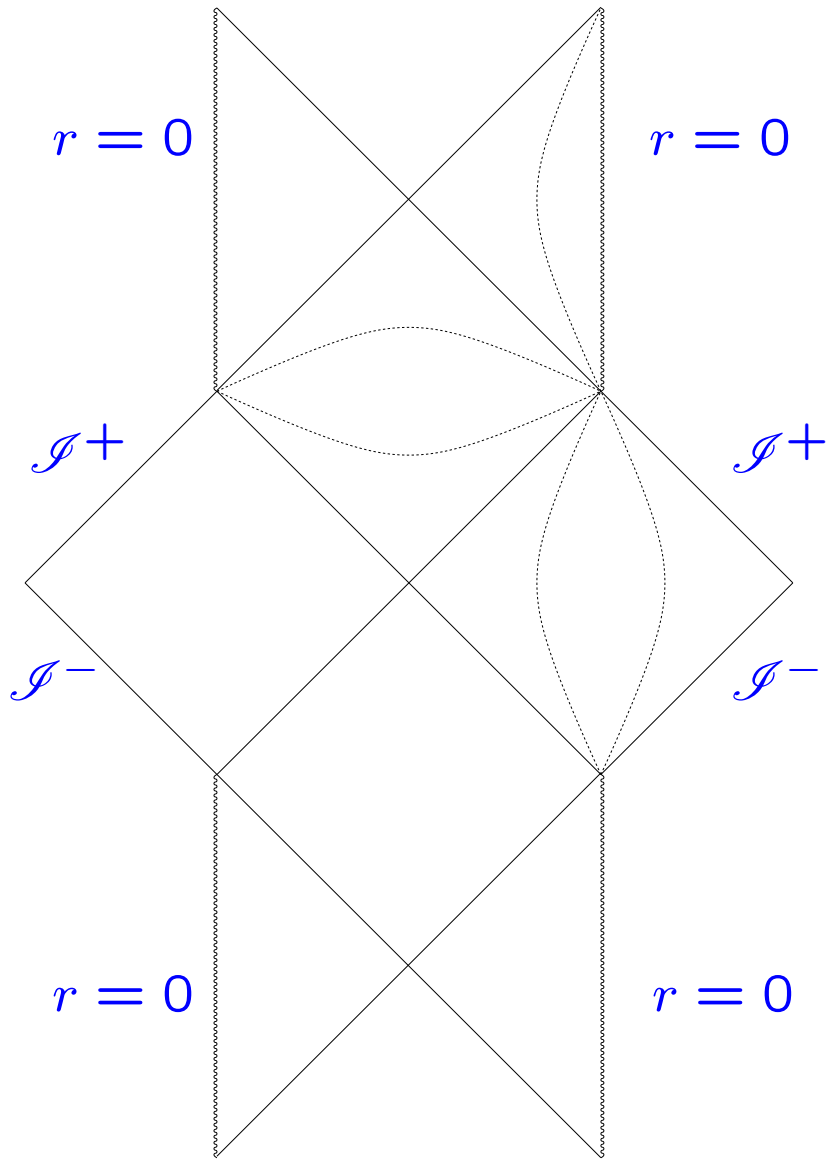
$r = 0$
$r = 0$
$\mathscr{I}^+$
$\mathscr{I}^+$
$\mathscr{I}^-$
$\mathscr{I}^-$
$r = 0$
$r = 0$

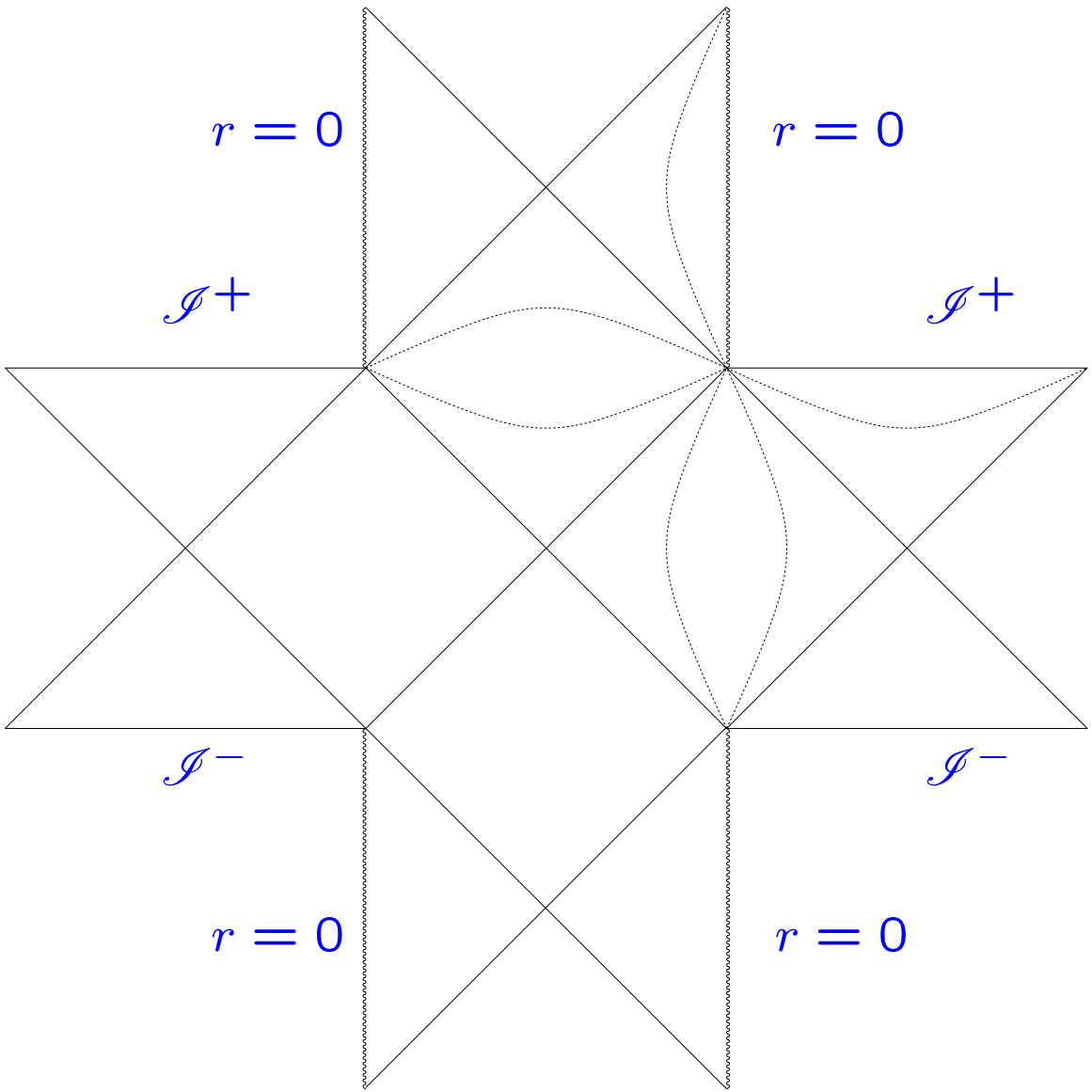
$r = 0$
$r = 0$
$\mathscr{I}^+$
$\mathscr{I}^+$
$\mathscr{I}^-$
$\mathscr{I}^-$
$r = 0$
$r = 0$

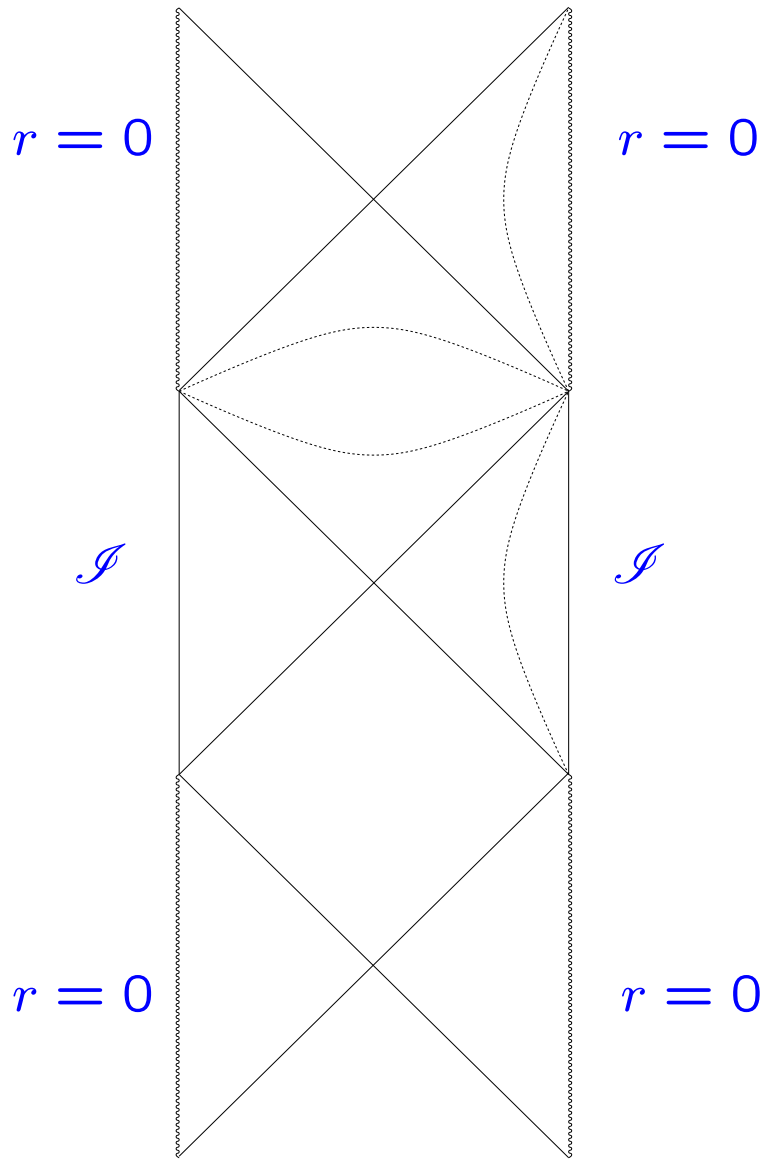
$r = 0$
$r = 0$
$\mathscr{I}$
$\mathscr{I}$
$r = 0$
$r = 0$

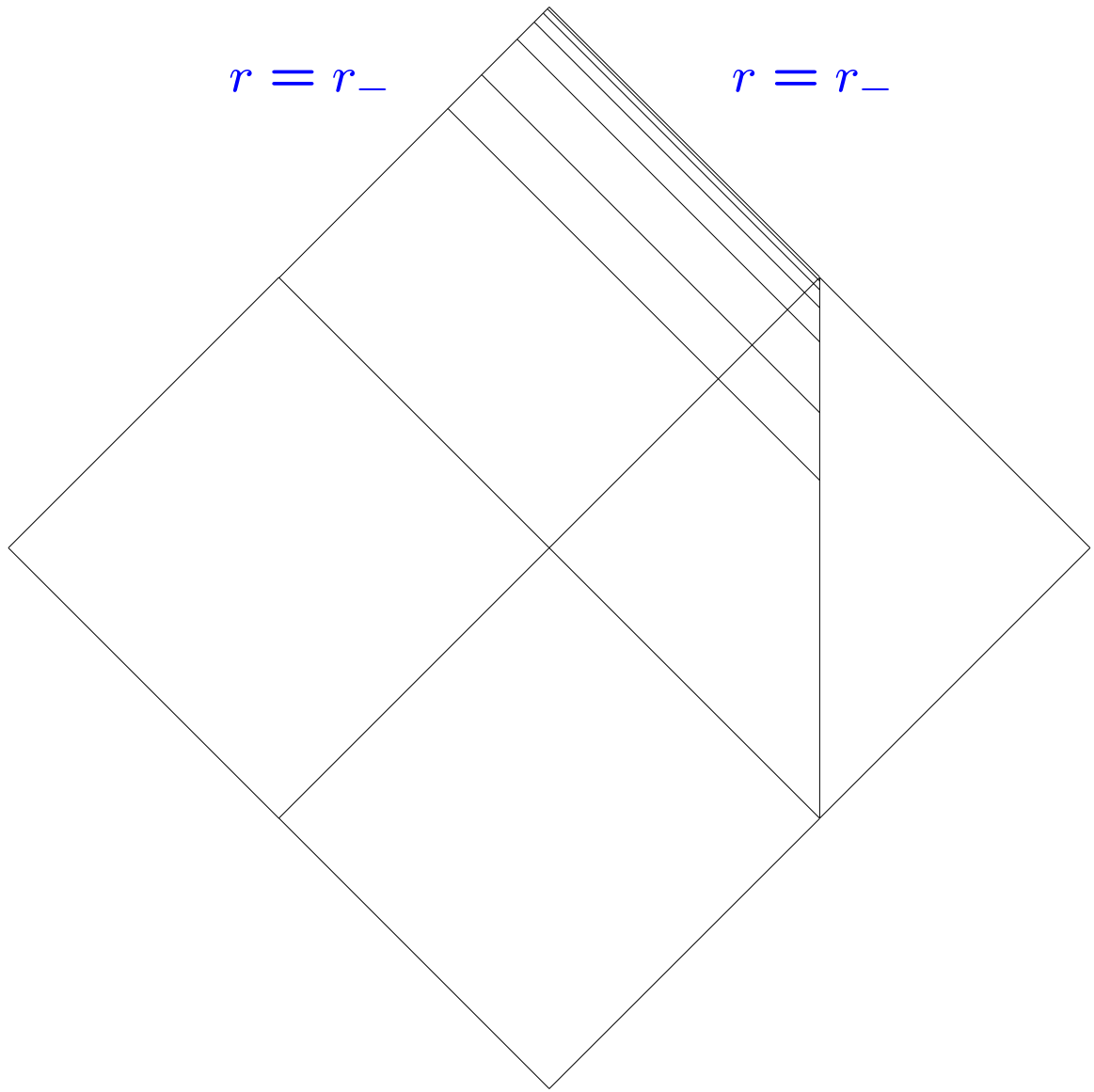
$r = r_-$
$r = r_-$

Strong cosmic censorship

- For generic solutions of the Einstein field equations with reasonable matter models no observer can see the singularity.

- PDE version: For generic initial data the maximal globally hyperbolic development is inextendible.

Mass inflation: heuristics

- Poisson and Israel (1989) gave a nonlinear heuristic analysis suggesting that for $\Lambda = 0$ the Cauchy horizon of generic solutions ($\phi \neq 0$) still has $r \to r_-$, but $\varpi \to +\infty$ (mass inflation).

- Brady, Moss and Myers (1998) performed a linear analysis suggesting that mass inflation might not occur for $\Lambda > 0$ near extremality (but the curvature still blows up at the Cauchy horizon).

- The whole question hinges on the decay properties of ϕ along the event horizon.

Mass inflation: rigorous results

- Dafermos (2005) proved the following two results for the spherically symmetric Einstein-Maxwell-scalar field system.

1. If $|\partial_v \phi| \lesssim v^{-1}$ along the event horizon then r can be extended to a nonvanishing continuous function on the Cauchy horizon, and so the metric can be extended as a C^0 metric.

2. If $v^{-3} \lesssim |\partial_v \phi| \lesssim v^{-1}$ along the event horizon then the Hawking mass blows up identically along the Cauchy horizon, and so the metric is inextendible as a C^1 metric.

- The first hypothesis (Price's law) was subsequently proved to occur by Dafermos and Rodnianski (2005).

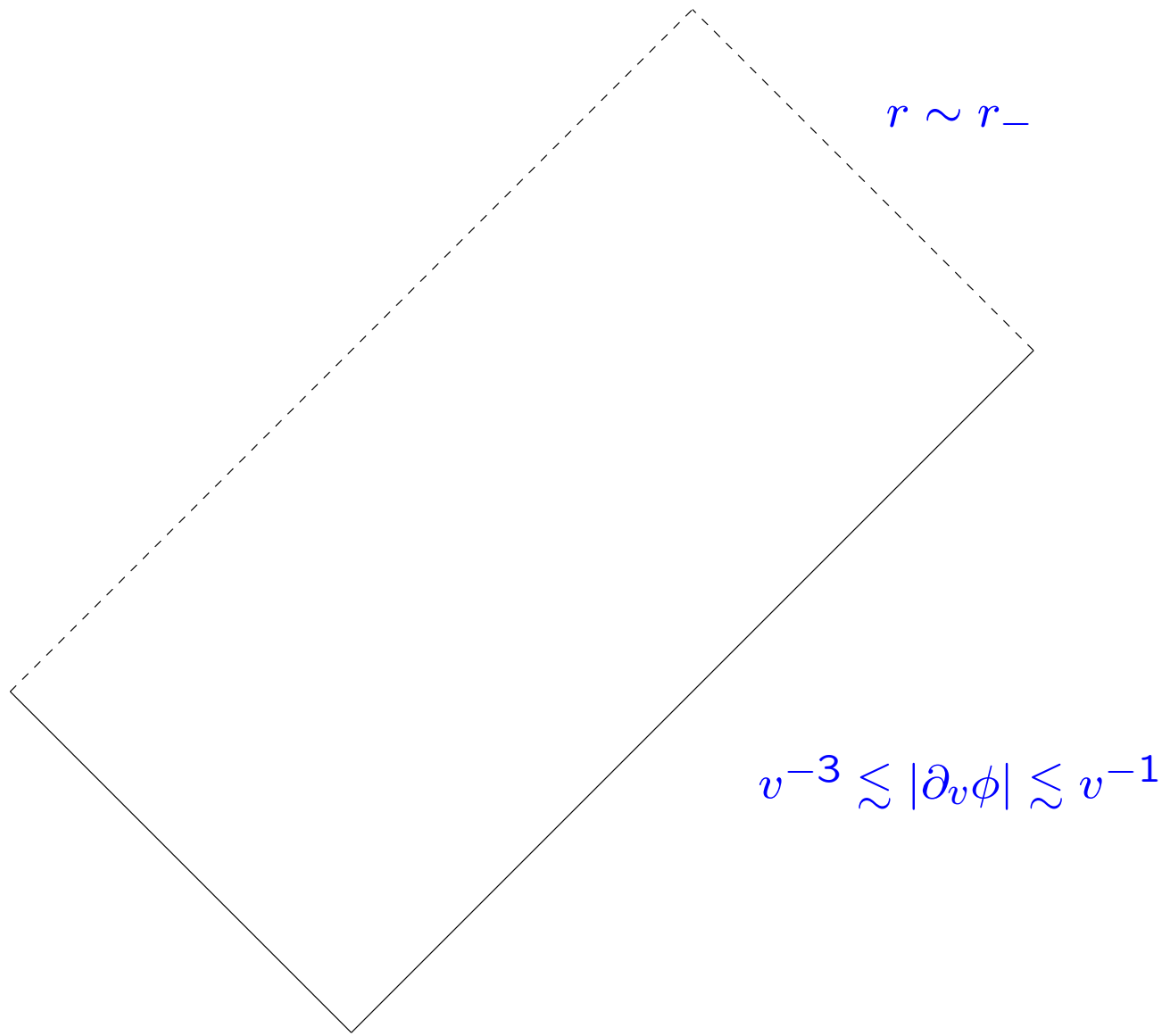
$r \sim r_-$
$v^{-3} \lesssim |\partial_v \phi| \lesssim v^{-1}$

- In a previous paper, Dafermos had assumed $\phi = 0$ on the event horizon and could only prove mass inflation away from extremality.

- The decay properties of ϕ along the event horizon appear to be crucial to mass inflation.

- For $\Lambda > 0$ one expects an exponential decay in Price's law, so it is likely that there is no mass inflation near extremality.

Bibliography

- E. Poisson and W. Israel, *Inner-horizon instability and mass inflation in black holes*, Phys. Rev. Lett. **63** (1989) 1663–1666

- P. Brady, I. Moss and R. Myers, *Cosmic censorship: as strong as ever*, Phys. Rev. Lett. **80** (1998) 3432–3435

- M. Dafermos, *The interior of charged black holes and the problem of uniqueness in general relativity*, Comm. Pure Appl. Math. **58** (2005) 445–504

- M. Dafermos and I. Rodnianski, *A proof of Price's law for the collapse of a self-gravitating scalar field*, Invent. Math. **162** (2005) 381–457